A Novel Reinforcement Learning Framework for Online Adaptive Seizure Prediction

Shouyi Wang, Wanpracha Art Chaovalitwongse
Department of Industrial and Systems Engineering
Rutgers, the State University of New Jersey
Piscataway, NJ, USA
shouyi@eden.rutgers.edu, wchaoval@rci.rutgers.edu

Stephen Wong
Robert Wood Johnson Medical School
University of Medicine and Dentistry of New Jersey
New Brunswick, NJ, USA
wongst@umdnj.edu

***Abstract*—Epileptic seizure prediction is still a very challenging and unsolved problem for medical professionals. The current bottleneck of seizure prediction techniques is the lack of flexibility for different patients with an incredible variety of epileptic seizures. This study proposes a novel self-adaptation mechanism which successfully combines reinforcement learning, online monitoring and adaptive control theory for seizure prediction. The proposed method eliminates a sophisticated threshold-tuning/optimization process, and has a great potential of flexibility and adaptability to a wide range of patients with various types of seizures. The proposed prediction system was tested on five patients with epilepsy. With the best parameter settings, it achieved an averaged accuracy of 71.34%, which is considerably better than a chance model. The autonomous adaptation property of the system offers a promising path towards development of practical online seizure prediction techniques for physicians and patients.**

***Index Terms*—biomedical data mining, adaptive seizure prediction, reinforcement learning, online monitoring**

I. Introduction

Epilepsy is one of the most common neurological disorders, affecting approximately 1% of the world's population [6]. Epileptic seizures generally occur without any warning, and the shift between normal brain state and seizure onset is often considered as an abrupt phenomenon. The unpredictability of seizure occurrence represents a significant source of morbidity in patients with epilepsy. Patients with epilepsy frequently suffer from seizure-related injuries due to loss of motor control, loss of consciousness or delayed reactivity during seizure onset [16]. At the moment, no technology is available to provide a warning to these patients prior to seizure onset. The ability to predict the occurrence of impending seizures could significantly improve the quality of life of epileptic patients. Seizure prediction may also lead to novel therapeutic strategies for seizure control. For example, a prediction-triggered closed-loop treatment may replace the traditional method of taking anticonvulsant drugs daily. Such temporally targeted therapy methods may largely reduce the side effects of current chronic drug treatments as reported in [3]. Perhaps most importantly, seizure prediction could give patients with epilepsy a greater sense of control over their lives.

One crucial question in seizure prediction is that whether an identifiable pre-seizure state exists. Over the recent years, there has been accumulating evidence indicating that a transitional pre-seizure state does exist prior to seizure onset. The majority of the quantitative evidence supporting the existence of a pre-seizure state is derived from Electroencephalography (EEG) analyses of epileptic seizures. For example, Lehnertz and Elger [12] showed that the correlation dimension decreases prior to seizures. Le van Quyen et al. [19] reported a reduction in the dynamical similarity index before seizure occurrence. Iasemidis et al. [8] noted premonitory pre-seizure changes based on the analysis of dynamical entrainment. Mormann et al. [15] observed a pre-seizure drop in phase synchronization up to hours prior to seizure onset. Recent studies suggests that four stages are evolved in a seizure process: normal, pre-seizure, seizure onset and post-seizure [13].

In the mid-1970s, Viglione and Walsh started the first pioneering project to investigate the predictability of seizures based on EEG data [25]. Since then, many studies have been carried out aiming to predict epileptic seizures based on EEG data. An extensive survey of EEG-based seizure prediction techniques can be found in [14]. In general, most of current seizure prediction methods mainly have two steps. Firstly, EEG features are extracted from a sliding moving window. Then each windowed EEG epoch is classified as either pre-seizure or normal based on a threshold level. Whenever a windowed EEG epoch is classified as pre-seizure, a warning alarm is triggered indicating that an impending seizure may occur within a pre-defined prediction horizon. Although these methods have shown good results for some patients, the reliability and repeatability of the results have been questioned when they were tested on other EEG datasets. Many of the earlier optimistic findings cannot be reproduced or achieved poor performance in extended EEG datasets in later studies as reported in [2]. This is not surprising since the optimal threshold obtained from a few number of patients may not be suitable to many others. The current seizure prediction techniques are still in their early stage. Before considering clinical applications, the evaluation of a seizure prediction method is still to test whether the prediction performance is consistently better than a chance level in most research efforts [27], [1], [11].

The biggest challenge of seizure prediction is the high inter- and intra-individual variability among the patients with epilepsy. The high variability makes the traditional nonadap-

tive methods difficult to function well for a wide range of patients with different epilepsy. This variability also highlights the emerging needs for automated adaptive learning frameworks for seizure prediction. On the other hand, the explosion of computing power has facilitated the rapid development of data mining and machine learning techniques in recent years [10], [26]. These techniques have found widespread applications to discover knowledge and make decisions from tremendous and rapidly expanding data in modern times. We regard the future perspective of a practical seizure prediction system should be autonomously adaptive to an individual patient with intelligent learning ability. Therefore, we focus on constructing an adaptive learning framework, which is capable of online monitoring the EEG recordings of a patient and updating timely to achieve the patient-specific seizure prediction. In the past, our group has been dedicated to develop online automated seizure prediction algorithms which could adaptively select the most critical electrodes after each prediction [9], [4], [21]. In this study, inspired by the great reinforcement learning ability of human beings, we attempt to construct an adaptive learning system, which could interactively learn from a patient, and achieve improving prediction performance over time. The proposed adaptive framework combines reinforcement learning, online monitoring, and feedback control theory into an online seizure prediction system. This adaptive learning framework offers an alternative path towards the development of practical intelligent devices for patient-specific online seizure prediction.

This paper is organized as follows. Section II presents the EEG data collection, feature extraction, and the proposed adaptive learning frameworks. The experimental results are provided in Section III, and we conclude the paper in Section IV.

II. Methods

A. Data Collection

In this study, we used a dataset containing continuous intracranial EEG recordings from five epileptic patients with temporal lobe epilepsy. The placement of the EEG Electrodes is shown in Figure 1, which is a modified image of the inferior transverse view of the brain from Potter [17]. The EEG recordings consist of 26 standard channels, and the durations are ranged from 3 to 13 days. The EEG recordings were all viewed by experts to determine the number of seizure onset, and the seizure onset starting and ending points. The summary of the EEG data is shown in Table I.

TABLE I
SUMMARY OF THE EEG DATA

Patient	Number of Electrodes	Duration of EEG (days)	Number of Seizures	Seizure Rate (per hour)
1	26	3.55	7	0.082
2	26	8.85	22	0.104
3	26	13.13	17	0.054
4	26	6.09	23	0.157
5	26	11.53	20	0.061
Total		43.15	89	

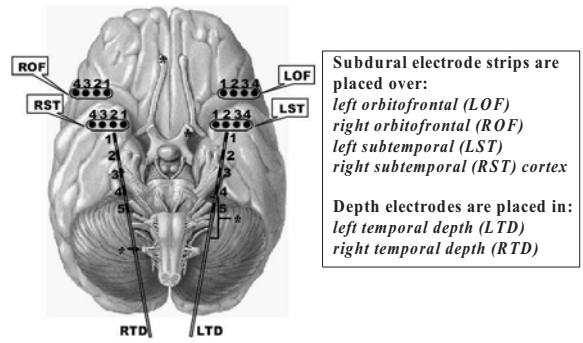

Fig. 1. The interior transverse view of the brain and the placement of the 26 EEG electrodes.

B. Data Preprocessing & Feature Extraction

Since EEG signals are highly nonstationary and seemingly chaotic, there has been an increasing interest in analyzing EEG signals in the context of chaos theory [20]. Several commonly used chaotic measures in many recent studies include largest Lyapunov exponent [9], correlation dimension [23], Hurst exponent [5] and entropy [18]. Among these EEG measures, it has been shown that the largest Lyapunov exponent is a very useful indicator to characterize a chaotic system [24]. In our previous studies, an estimation algorithm called short-term largest Lyapunov exponent (STL_{max}) was used to quantify EEG dynamics [9]. Along this line of research, we also employ STL_{max} to characterize raw EEG data in this study. The detailed calculation of STL_{max} as well as parameter selection can be found in Iasemidis in [7].

C. Adaptive Seizure Prediction Framework

The schematic structure of the proposed adaptive seizure prediction system is illustrated in Figure 2. A sliding moving window was applied to read continuous multichannel EEG data. We set the window size at 10 min and let it move with a 50% overlap at each step. Two baselines of normal and pre-seizure states were constructed to classify windowed EEG epochs using a KNN method. All the baseline samples and windowed EEG epochs were represented in terms of multichannel time profile of STL_{max}s. According to prediction feedbacks (correct or not), the two baselines were updated in a reinforcement learning procedure. The adaptive seizure prediction system is discussed in detail in the following.

1) Baseline Construction & Initialization: To start our prediction system, we need to initialize the pre-seizure and normal baseline samples. The selection of baseline samples highly depends on the presumed time length of pre-seizure period, which is often used as prediction horizon in seizure prediction literature. So far little is known to define pre-seizure duration, which has been reported between a few minutes and several hours prior to seizure onsets. The prediction horizon for epileptic seizures is still an open question in epilepsy research. In this study, we tried three prediction horizons, which are 30 min, 90min, and 150min, respectively. If we set the prediction horizon at H minutes, then the EEG recordings can be divided into the following three periods:

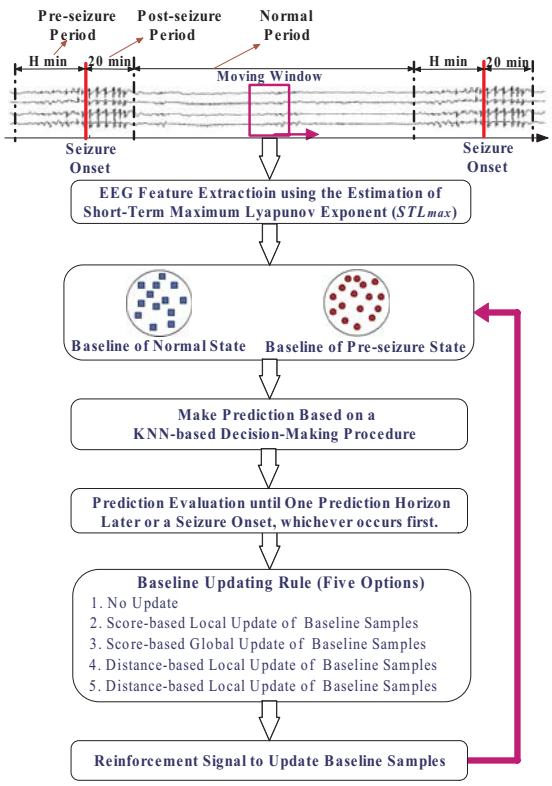

Fig. 2. Schematic structure of the adaptive prediction system.

- Pre-seizure period: 0-H min preceding a seizure onset.
- Post-seizure period: 0-20 min after a seizure onset.
- Normal period: between pre- and post-seizure periods.

The initial samples of the two baselines were randomly chosen from the normal and pre-seizure period preceding the first seizure onset. The length of the baseline samples is equal to that of the moving window. Since there is no guideline available to determine the number of samples in each baseline, we tentatively stored a fixed number of 50 samples in each baseline.

2) KNN Prediction Procedure: With baselines for normal and pre-seizure states, it is intuitive and practical for physicians to decide the class of a windowed EEG epoch based on its degree of matching between the two baselines. For this purpose, KNN is the best choice because it classifies a new unlabeled sample by comparing it with all the samples of the two baselines. Thus, we employed KNN method to find the K best matching samples in each of the two baselines and compare them to make a decision. The KNN prediction procedure is described in the following.

At first, a KNN method has to use similarity measures to quantify the closeness between a moving-window EEG and baseline samples. We employed three frequently used time series similarity measures. If we denote two time series of STL_{max} as X and Y with equal length of n, then the three types of distances are briefly described as follows.

- Euclidean distance (EU): $ED_{xy} = \sum_{p=1}^{n}(x_p - y_p)^2/n$.
- T-statistical distance (TS): $ED_{xy} = \sum_{p=1}^{n}(x_p - y_p)^2/n$, where $\tau_{|X-Y|}$ is the sample standard deviation of the absolute difference between the time series X and Y.
- Dynamic time warping (DTW): DTW measures similarity based on the best possible alignment or the minimum mapping distance between two time series. A detailed calculation of DTW can be found in [22].

Once a similarity measure is chosen, the distance between a windowed EEG epoch and a baseline sample, denoted as window-sample distance, can be obtained. The similarity measures deal with one dimensional time series at a time, and a sample-window distance for a multichannel EEG epoch is calculated as follows:

$$d_{pre,i} = \sum_{j=1}^{M} distance(S^j_{pre,i}, S^j_{mw}) \quad (1)$$

$$d_{int,i} = \sum_{j=1}^{M} distance(S^j_{int,i}, S^j_{mw}) \quad (2)$$

where M=26 is the number of EEG channels. $S^j_{pre,i}$ and $S^j_{int,i}$ is the jth channel of the ith pre-seizure and normal baseline sample, respectively; $S^j_{mv,i}$ is the jth channel of the windowed EEG epoch. $d_{pre,i}$ and $d_{int,i}$ denote the distance between the windowed EEG epoch and the ith sample in the pre-seizure and normal baseline, respectively. We call these two distances as window-sample distances. The term $distance$ in the above formula represents a time series distance measure, which can be EU, TS, or DTW in this paper.

Four choices of K were employed, which were three, seven, half, and all of the baseline samples, respectively. For a specific value of K, the weighted summation of K nearest window-sample distances in a baseline was considered as the distance between the windowed EEG epoch and that baseline. We call the two distances as window-normal distance and window-preseizure distance, respectively. For each windowed EEG epoch, its distances to the two baselines can be calculated as follows:

$$D^K_{pre} = \sum_{k=1}^{K} \alpha_k d_{pre,k} \quad (3)$$

$$D^K_{int} = \sum_{k=1}^{K} \beta_k d_{int,k} \quad (4)$$

where D^K_{pre} and D^K_{int} are the window-preseizure distance and window-normal distance, respectively. $d_{pre,k}$ and $d_{int,k}$ are the window-sample distances of the kth sample of the K nearest neighbors in the pre-seizure and normal baseline, respectively. Once the two baseline-window distances are obtained, the prediction decision can be made by:

$$predictor = \begin{cases} 1, & \text{if } D^K_{pre}/D^K_{int} \leq h \text{ (trigger a warning)} \\ 0, & \text{otherwise (no warning)} \end{cases}$$

where the threshold $h = 1$ by default.

3) Evaluation of a Prediction Result: If the prediction horizon is H min, then each prediction outcome can be categorized into one of the following four subsets:

- True positive (TP): if $predictor = 1$ and a seizure occurs within H minutes after the prediction.
- False positive (FP): if $predictor = 1$ and no seizure occurs within H minutes after the prediction.
- True negative (TN): if $predictor = 0$ and no seizure occurs within H minutes after the prediction.
- False negative (FN): if $predictor = 0$ and a seizure occurs within H minutes after the prediction.

4) Baseline Updating Mechanism: The flowchart of the baseline update framework from delayed prediction feedback is shown in Figure 3. In medical practice, a physician usually compares the EEG patterns from an individual with the patterns from a database of many other patients and healthy people. The search of the best matching patterns can be global within the whole database, and can also be local within a sub-group of the database. Inspired by this procedure, both local and global update rules were designed. In particular, we designed four update rules including score-based local update (SL), score-based global update (SG), distance-based local update (DG), and distance-based global update (DG).

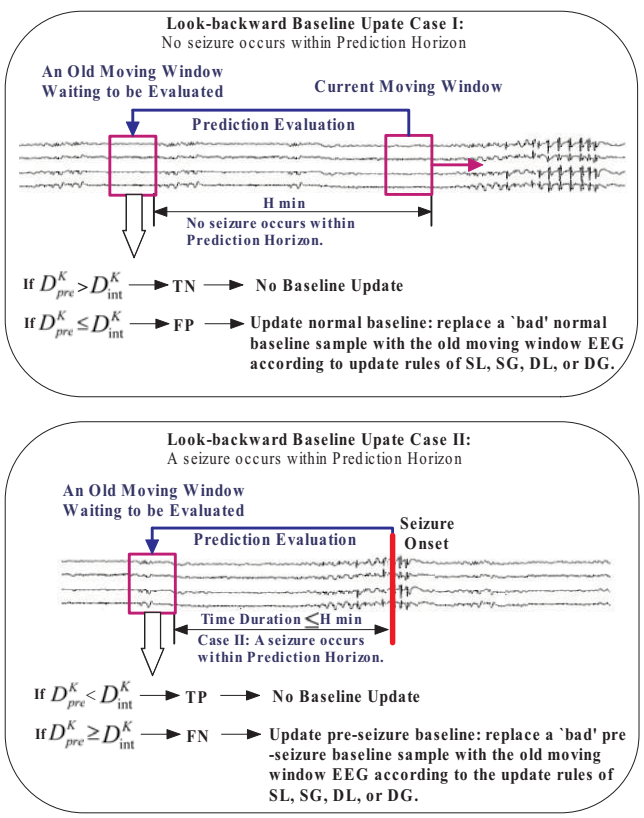

Fig. 3. Flowchart of the adaptive baseline-updating framework.

Score-Based Update: In this case, we assume that different baseline samples have different power in decision making. The 'importance' of a baseline pattern can be represented by a score associated with that baseline sample. The scores of all baseline samples were equal at the beginning. The initial score of each baseline sample is given by:

$$\alpha_i = \beta_i = \frac{1}{N}, \ i = 1, \ldots, N \tag{5}$$

where α_i and β_i are the scores of the ith sample in the pre-seizure and normal baseline, respectively. N=50 is the number of samples in each baseline. Let $r \in (0, 1)$ denote the learning rate to control the update size for the scores, then the score update rule is represented as follows:

- For cases of TP & FN, the score update rule is:

$$\alpha_i = \alpha_i(1 - \frac{d_{pre,i} - d_{pre}}{d_{pre}}) \times r \tag{6}$$

$$\beta_i = \beta_i(1 + \frac{d_{int,i} - d_{int}}{d_{int}}) \times r \tag{7}$$

- For cases of FP & TN, the score update rule is:

$$\alpha_i = \alpha_i(1 + \frac{d_{pre,i} - d_{pre}}{d_{pre}}) \times r \tag{8}$$

$$\beta_i = \beta_i(1 - \frac{d_{int,i} - d_{int}}{d_{int}}) \times r \tag{9}$$

where $\forall i = 1, 2, \ldots, N$, $d_{pre} = \sum_{i=1}^{N} d_{pre,i}/N$, and $d_{int} = \sum_{i=1}^{N} d_{int,i}/N$.

The baseline update rule can be described as follows:

- For case of FP: replace the lowest-scored sample in its K-nearest neighbors of the normal baseline with the corresponding moving-window EEG.
- For case of FN: replace the lowest-scored sample in its K-nearest neighbors of the pre-seizure baseline with the corresponding moving-window EEG.
- For cases of TP and TN: keep the current baseline samples unchanged.

When K equals to N, it becomes a global update rule which replaces the lowest-scored sample in the baseline. And when K is smaller than N, it is a local update rule which only considers the local K nearest neighbors of a windowed EEG epoch. The score-based local and global update rules are denoted as 'SL' and 'SG', respectively.

Distance-based Update: The distance between two EEG epochs indicates the degree of similarity match. Intuitively, a shorter distance means a better match, and a larger distance indicates a worse match. Correspondingly, the basic idea of the distance-based update is that, when it comes to replace one 'bad' sample in a baseline after a false prediction, we choose the baseline sample which has the largest distance to the windowed epoch. We consider this sample has the worst match with the windowed epoch, and thus may be the major cause of the false prediction. In summary, the baseline update rule can be described as follows:

- For case of FP: replace the furthest sample in its K-nearest neighbors of the normal baseline with the corresponding windowed EEG epoch.
- For case of FN: replace the furthest sample in its K-nearest neighbors of the pre-seizure baseline with the corresponding windowed EEG epoch.
- For cases of TP and TN: keep the current baseline samples unchanged.

Similar to 'SL' and 'SG', the distance-based update can also be local and global depending on the value of K. The distance-based local and global update rules are denoted as 'DL' and 'DG', respectively.

D. Evaluation of Prediction Performance

Time Block-Based Sensitivity and Specificity: We label the continuous EEG by a series of time blocks. The block length is equal to the length of prediction horizon (H min). In particular, the pre-seizure periods were defined as pre-seizure time blocks. The normal period between two seizures were divided into a number equal-sized normal time blocks with a length of H min. The prediction outcome of each time block can be categorized into one of the following four subsets:

- TP_{blk}: at least one warning in a pre-seizure time block.
- TN_{blk}: no warning within a normal time block.
- FP_{blk}: at least one warning in a normal time block.
- FN_{blk}: no warning within a pre-seizure time block.

Then the time block-based sensitivity and specificity are defined as follows:

$$sen_{blk} = \frac{TP_{blk}}{TP_{blk} + FN_{blk}} \tag{10}$$

$$spe_{blk} = \frac{TN_{blk}}{FP_{blk} + TN_{blk}} \tag{11}$$

The time block-based sensitivity and specificity are more suitable to evaluate prediction performance than the traditional definition of sensitivity and specificity, since they consider the effects of prediction horizon for online seizure prediction.

Receiver Operating Characteristic (ROC) Analysis: Based on sensitivity and specificity, a common method in comparing the prediction performance of a model is to use the ROC curve. The ROC curve is a plot of sensitivity versus false alarm rate (1-specificity) as the discrimination setting of a classifier is varied. The ROC curve for a perfect prediction model is the line connecting [0, 0] to [0, 1] and [0, 1] to [1, 1]. And the diagonal line connecting [0, 0] to [1, 1] is the ROC curve corresponding to a random model. Generally, a ROC curve lies between these two extreme lines. The *area under the ROC curve* (AUC) is often used as an important metric to evaluate a prediction model. The AUC is an overall summary of prediction accuracy across the spectrum of its decision-making values. AUC values are usually between 0.5 and 1. The AUC of a perfect predictor is 1 while a purely random chance model has an AUC of 0.5 on average. The higher the AUC value is to one, the better prediction power it indicates.

III. Results

A. Prediction Performance based on sen_{blk} and spe_{blk}

Table II summarizes the sen_{blk} and spe_{blk} of the adaptive prediction system with the best parameter settings. The results show that the sen_{blk} was ranged from 57.89% (Patient 5, 30 min) to 100.00% (Patient 1, 30 min), and the spe_{blk} was ranged from 43.38% (Patient 1, 90 min) to 91.76% (Patient 1, 150 min). The best averaged accuracy was achieved at the rates of 74.36% using the prediction horizon of 150 min. The averaged accuracy over the three prediction horizons was 71.34%.

TABLE II
THE SUMMARY OF sen_{blk} AND spe_{blk} OBTAINED BY THE ADAPTIVE LEARNING PREDICTOR WITH THE BEST PARAMETER SETTINGS.

Horizon	30 min			90 min			150 min		
Patient	sen.	spe.	setting	sen.	spe.	setting	sen.	spe.	setting
1	100.00%	46.83%	half-DTW-SL	100.00%	43.38%	3-TS-DL	83.33%	91.76%	all-EU-DL
2	66.67%	72.30%	3-TS-DL	66.67%	63.93%	half-EU-DG	66.67%	84.46%	7-EU-SL
3	87.50%	63.54%	3-EU-SL	62.50%	72.53%	7-EU-SG	87.50%	55.55%	3-DTW-SL
4	64.71%	77.32%	all-EU-DG	88.24%	74.61%	half-EU-DG	76.47%	83.00%	7-EU-DL
5	57.89%	60.06%	7-TS-DL	73.68%	54.48%	half-DTW-DG	57.89%	57.00%	3-DTW-DL
Ave.	75.35%	64.01%	-	78.22%	61.79%	-	74.37%	74.35%	-
Acc.	69.68%		-	70.00%		-	74.36%		-

In a contrast experiment, we also tested a Poisson predictor, which randomly raised a warning with a mean interval of λ minutes. The performances using different values of λ were similar in terms of time-block-based sensitivity/specificity. As an example, the performance of the Poisson predictor with λ=60 is shown in Table III. One can see clearly that the adaptive learning predictor achieved a considerable better prediction performance than the Poisson random predictor. The adaptive scheme with best parameter settings achieved an overall averaged accuracy around 70%, while the random predictor had an overall accuracy around 50%.

TABLE III
THE SUMMARY OF sen_{blk} AND spe_{blk} OBTAINED FROM A POISSON RANDOM PREDICTOR WITH A MEAN INTERVAL OF 1 HOUR.

Prediction Horizon	30 min		90 min		150 min	
Patient	sen.	spe.	sen.	spe.	sen.	spe.
1	52.00%	39.00%	100.00%	2.10%	100.00%	0.44%
2	58.67%	39.33%	98.67%	0.53%	97.33%	0.55%
3	51.00%	40.63%	99.00%	1.38%	100.00%	0.89%
4	48.47%	40.39%	92.47%	1.47%	94.12%	0.56%
5	54.11%	40.24%	99.79%	0.99%	100.00%	0.30%
Ave.	52.85%	39.92%	97.99%	1.29%	98.29%	0.55%
Accuracy	46.38%		49.64%		49.42%	

B. Receiver Operating Characteristic Analysis

The above analysis discusses the prediction results of the best parameter settings for each patient. In this subsection, we employ ROC analysis to further investigate the effectiveness of the proposed adaptive schemes for all parameter settings. The averaged AUC value over the five patients was calculated for each parameter setting. Figure 4 plots the averaged AUC values for each of the five update schemes (None, SL, SG, DL, and DG) across all the 36 parameter settings (4 choices of K $\times$ 3 distance measures $\times$ 3 prediction horizons). It is clear to observe that the AUC values of the four adaptive updating schemes are generally larger than those of the nonadaptive scheme. Compared with the nonadaptive scheme, 27, 29, 36, and 36 parameter settings of the adaptive schemes SL, SG, DL, and DG increased the AUC values of the prediction system. In other word, most of the parameter choices of the adaptive schemes SL, SG, DL, DG have demonstrated their effectiveness in improving the prediction power of the system. We also notice that the AUC values of the local update schemes (SL and DL) were lower than those of the global schemes (SL and SG), on average. The global update schemes did a better job than the local update schemes. This may indicate that the EEG patterns within each baseline were likely to be a homogeneous group. This is reasonable to our

anticipation, since we only have limited available EEG data. The number of seizures per patient was only ranged from 7 to 23. The limited number of seizures may not be enough to train a reinforcement learner to establish distinct pattern sub-groups in each baseline if they do exist.

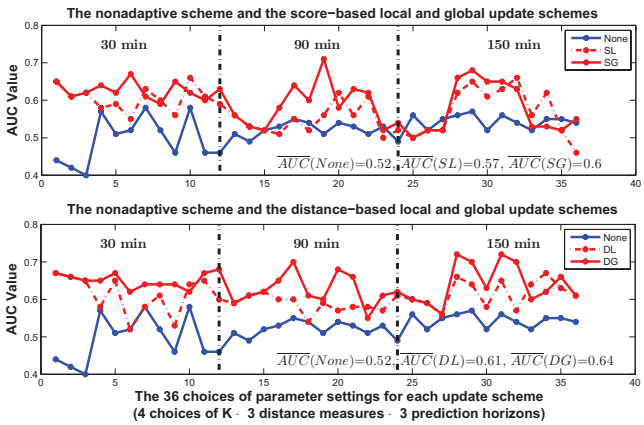

Fig. 4. The averaged AUC values over the five patients for all the 180 parameter settings (5 update schemes × 36 parameter settings per scheme). Particularly, the upper plot compares the nonadaptive scheme with the score-based local/global update schemes; the lower plot compares the nonadaptive scheme with the distance-based local/global update schemes.

IV. Conclusions

In this work, we propose a novel seizure prediction framework, which combines reinforcement learning, online monitoring and adaptive control theory to advance the adaptability of the system. By means of the EEG recordings from five patients with epilepsy, we demonstrated that the adaptive learning framework did improve the prediction performance of the prediction system. The outcomes of this study are encouraging considering that the current seizure prediction techniques are still in their early stage trying to work better than a chance level. The prediction scheme with adaptive learning ability is promising to function well for a wide range of patients. It has a great potential to handle a great variety of pre-seizure brainwave patterns. The long-term goal of this research is to design intelligent machine-learning interfaces that could adaptively predict abnormal mental states for patients with brain diseases. This prediction system could eventually take the form of an implanted 'brain pacemaker', stimulating the brain to prevent an abnormal brain state from happening in its very early stage.

References

[1] R. Andrzejak, F. Mormann, T. Kreuz, C. Rieke, A. Kraskov, C. Elger, and K. Lehnertz. Testing the null hypothesis of the non-existence of a pre-seizure state. *Physical Review E*, 67:010901, 2003.

[2] R. Aschenbrenner-Scheibe, T. Maiwald, M. Winterhalder, H. Voss, J. Timmer, and A. Schulze-Bonhage. How well can epileptic seizures be predicted? An evaluation of a nonlinear method. *Brain*, 126:2616–2626, 2003.

[3] G. Baker, A. Jacoby, D. Buck, C. Stalgis, and D. Monnet. Quality of life of people with epilepsy: A European study. *Epilepsia*, 38(3):353–362, 1997.

[4] W. Chaovalitwongse, L. Iasemidis, P. Pardalos, P. Carney, D. Shiau, and J. Sackellares. Performance of a Seizure Warning Algorithm based on the Dynamics of Intracranial EEG. *Epilepsy Research*, 64(3):93–133, 2005.

[5] S. Dangel, P. Meier, H. Moser, S. Plibersek, and Y. Shen. Time series analysis of sleep EEG. *Computer assisted Physics*, pages 93–95, 1999.

[6] J. Engel and T. Pedley. *Epilepsy: A Comprehensive Textbook*. Lippincott Williams & Wilkins, Philadelphia, PA, 1997.

[7] L. Iasemidis. *On the dynamics of the human brain in temporal lobe epilepsy*. PhD thesis, University of Michigan, Ann Arbor, 1991.

[8] L. Iasemidis, J. Principe, J. Czaplewski, R. Gilman, S. Roper, and J. Sackellares. Spatiotemporal transition to epileptic seizures: A nonlinear dynamical analysis of scalp and intracranial EEG recordings. In *Spatiotemporal Models in Biological and Artificial Systems*, pages 81–88. Amsterdam: IOS Press, 1997.

[9] L. Iasemidis, D. Shiau, W. Chaovalitwongse, J. Sackellares, P. Pardalos, J. Principe, P. Carney, A. Prasad, B. Veeramani, and K. Tsakalis. Adaptive epileptic seizure prediction system. *IEEE Transactions on Biomedical Engineering*, 50(5):616–627, 2003.

[10] V. Kecman. *Learning and Soft Computing, Support Vector machines, Neural Networks and Fuzzy Logic Models*. The MIT Press, Cambridge, MA, 2001.

[11] T. Kreuz, R. Andrzejak, F. Mormann, A. Kraskov, H. Stögbauer, C. Elger, K. Lehnertz, and P. Grassberger. Measure profile surrogates: A method to validate the performance of epileptic seizure prediction algorithms. *Physical Review E*, 69(6):061915, 2004.

[12] K. Lehnertz and C. Elger. Can epileptic seizures be predicted? evidence from nonlinear time series analysis of brain electrical activity. *Physics Review Letters*, 80:5019–5022, 1998.

[13] K. Lehnertz and B. Litt. The first international collaborative workshop on seizure prediction: summary and data description. *Clinical Neurophysiology*, 116(3):493–505, 2005.

[14] F. Mormann, R. Andrzejak, C. Elger, and K. Lehnertz. Seizure prediction: The long and winding road. *Brain*, 130(2):314–333, 2007.

[15] F. Mormann, T. Kreuz, C. Rieke, R. Andrzejak, A. Kraskov, P. David, C. Elger, and K. Lehnertz. On the predictability of epileptic seizures. *Journal of Clinical Neurophysiology*, 116(3):569–587, 2006.

[16] H. Persson, K. Alberts, B. Farahmand, and T. Tomson. Risk of extremity fractures in adult outpatients with epilepsy. *Epilepsia*, 43(7):768–772, 2002.

[17] H. Potter. Anatomy of the brain. http://faculty.ucc.edu/biology-potter/TheBrain/, 2006.

[18] R. Quiroga, J. Arnhold, K. Lehnertz, and P. Grassberger. Kulback-leibler and renormalized entropies: applications to electroencephalograms of epilepsy patients. *Physical review. E, Statistical physics, plasmas, fluids, and related interdisciplinary topics*, 62:8380–8386, 2000.

[19] M. L. V. Quyen, V. Navarro, M. Baulac, B. Renault, and J. Martinerie. Anticipation of epileptic seizures from standard EEG recordings. *The Lancet*, 361(9361):970–971, 2003.

[20] P. Rapp, T. Bashore, J. Martinerie, A. Albano, I. Zimmerman, and A. Mess. Dynamics of brain electrical activity. *Brain Topography*, 2:99–118, 1989.

[21] J. Sackellares, D. Shiau, J. Principe, M. Yang, L. Dance, W. Suharitdamrong, W. Chaovalitwongse, P. Pardalos, and L. Iasemidis. Predictibility analysis for an automated seizure prediction algorithm. *Journal of Clinical Neurophysiology*, 23(6):509–520, 2006.

[22] P. Senin. Dynamic time warping algorithm review. Technical report, Information and Computer Science Departament University of Hawaii, Honolulu, 2008.

[23] C. Silva, I. Pimentel, A. Andrade, J. Foreid, and E. Ducla-Soares. Correlation dimension maps of EEG from epileptic absences. *Brain Topography*, 11:201–209, 1999.

[24] J. Vastano and E. Kostelich. Comparison of algorithms for determining Lyapunov exponents from experimental data. In *International conference on dimensions and entropies in chaotic systems*, pages 100–107, Pecos River, NM, USA, 1985.

[25] S. Viglione and G. Walsh. Epileptic seizure prediction. *Electroencephalography and Clinical Neurophysiology*, 39:435–436, 1975.

[26] L. Wang and X. Fu. *Data Mining with Computational Intelligence*. Springer, Berlin Heidelberg, NY, 2005.

[27] M. Winterhalder, T. Maiwald, H. Voss, R. Aschenbrenner-Scheibe, J. Timmer, and A. Schulze-Bonhage. The seizure prediction characteristic: a general framework to assess and compare seizure prediction methods. *Epilepsy & Behavior*, 4(3):318–325, 2003.